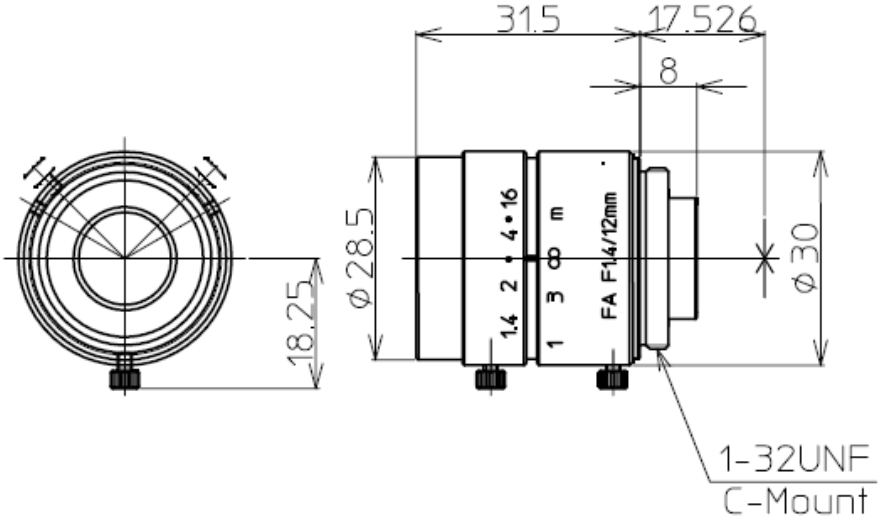

2/3" 1.4/12mm C		1/2"	1/3"
FOCAL LENGTH	f=12mm		
MAX. DIAMETER (RATIO)	F=1:1.4~16		
ELEMENT	6gp 6 element		
PICTURE SIZE	6.6x8.8mm	4.8x6.4	3.6x4.8
ANGLE VER. ANGLE	31.7°	23.0°	17.2°
HOR. ANGLE	42.5°	30.7°	23.0°
DIA. ANGLE	53.7°	38.5°	28.8°
DISTORTION	-2.5%	-1.2%	-0.6%
SHOOTING RANGE AT VER.	173mm	123.8mm	92.2mm
MINIMUM FOCUS HOR.	237mm	167.2mm	123.8mm
DISTANCE DIA.	307mm	212.8mm	156.2mm
MINIMUM FOCUS DISTANCE	0.1m		
FLANGE BACK	17.526 mm in air		
BACK FOCUS	11.12mm in air		
FILTER SCREW SIZE	M27x0.5		
FRONT/REAR EFFECTIVE DIA.	front ø12.3mm rear ø11.7mm		
MOUNT	C-MOUNT		
EXIT PUPIL	-38.9mm		
TEMPERATURE RANGE	-10~+45°C		
STORAGE TEMPERATURE RANGE	-40~+60°C		
RESOLUTION CENTER/CORNER	Center 100LP/mm Corner 60LP/mm		

		LM12JC		
		2/3" 1.4/12mm		