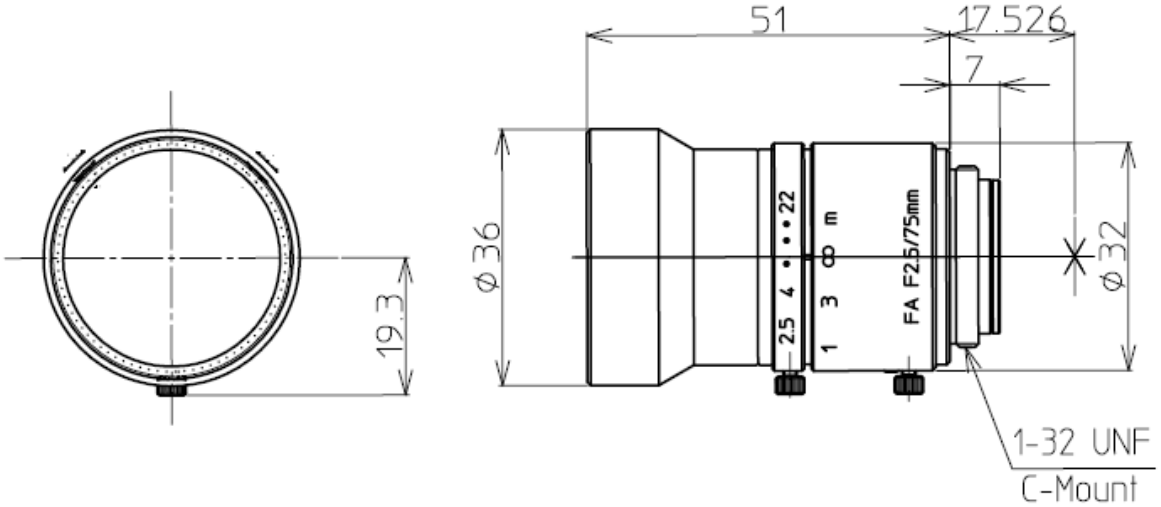


| 2/3" 2.5/75mm C | | 1/2" | 1/3" |
|---|---|---|---|
| FOCAL LENGTH | f=75mm | | |
| MAX. DIAMETER (RATIO) | F=1:2.5~22 | | |
| ELEMENT | 5Gr 5Element | | |
| PICTURE SIZE | 6.6x8.8mm | 4.8x6.4 | 4.8x3.6 |
| ANGLE VER. ANGLE | 5.0° | 3.7° | 2.8° |
| HOR. ANGLE | 6.7° | 4.9° | 3.7° |
| DIA. ANGLE | 8.3° | 6.1° | 4.6° |
| DISTORTION | -0.1% | -0.08% | -0.05% |
| SHOOTING RANGE AT MINIMUM FOCUS DISTANCE VER. | 38.1mm | 27.7 | 20.4 |
| HOR. | 50.8mm | 37.0 | 27.7 |
| DIA. | 63.5mm | 46.2 | 34.7 |
| MINIMUM FOCUS DISTANCE | 1.2m 0.5m with adapter | | |
| FLANGE BACK | 17.526 mm in air | | |
| BACK FOCUS | 18.0mm in air | | |
| FILTER SCREW SIZE | M34.0x0.5 | | |
| FRONT/REAR EFFECTIVE DIA. | Front ϕ30.2mm Rear ϕ12.4mm | | |
| MOUNT | C-MOUNT | | |
| EXIT PUPIL | -38.9mm | | |
| TEMPERATURE RANGE | -10~+45° C | | |
| STORAGE TEMPERATURE RANGE | -40~+60° C | | |
| RESOLUTION CENTER/CORNER | Center 100LP/mm Corner 60LP/mm | | |
| | | | |

| | | | | |
|---|---|---|---|---|
| | | | | |
| | | LM75JC | | |
| | | 2/3" F2.5 f=75mm | | |