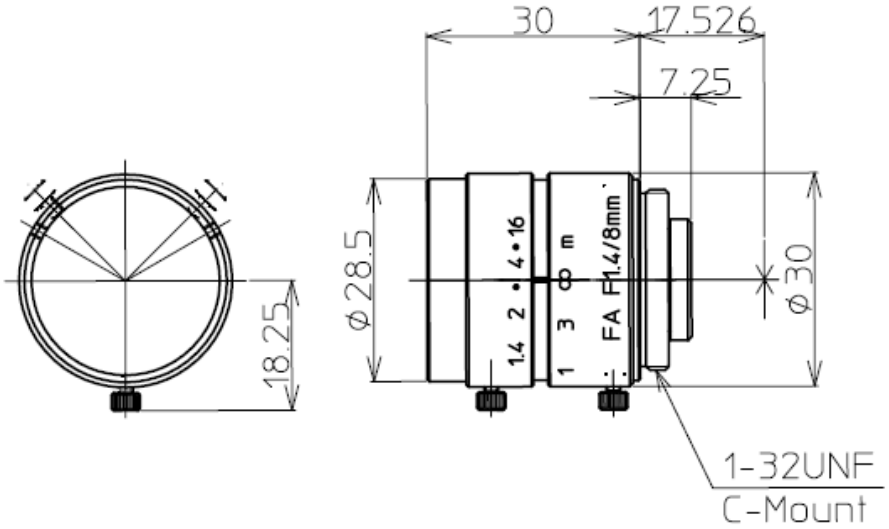

2/3" 1.4/ 8mm C		1/2"	1/3"
FOCAL LENGTH	f=8mm		
MAX. DIAMETER (RATIO)	F=1:1.4~16		
ELEMENT	6Gr 7 Element		
PICTURE SIZE	6.6x8.8mm	4.8x6.4	3.6x4.8
ANGLE VER. ANGLE	47.7°	34.6°	28.6°
HOR. ANGLE	64.2°	46.2°	34.5°
DIA. ANGLE	81.3°	58.1°	43.3°
DISTORTION	-6.2%	-2.5%	-1.3%
SHOOTING RANGE AT MINIMUM FOCUS DISTANCE VER.	184mm	129.3mm	95.5mm
HOR.	260mm	177.5mm	129.3mm
DIA.	356mm	231.0mm	165.1mm
MINIMUM FOCUS DISTANCE	0.1m		
FLANGE BACK	17.526 mm in air		
BACK FOCUS	11.30mm in air		
FILTER SCREW SIZE	M27x0.5		
FRONT/REAR EFFECTIVE DIA.	Front φ17.4mm	Rear φ11.1mm	
MOUNT	C-MOUNT		
EXIT PUPIL	-27.0mm		
TEMPERATURE RANGE	-10~+45° C		
STORAGE TEMPERATURE RANGE	-40~+60° C		
RESOLUTION CENTER/CORNER	Center 100LP/mm	Corner 60LP/mm	

	LM8JC		
	2/3" 1.4/8mm		