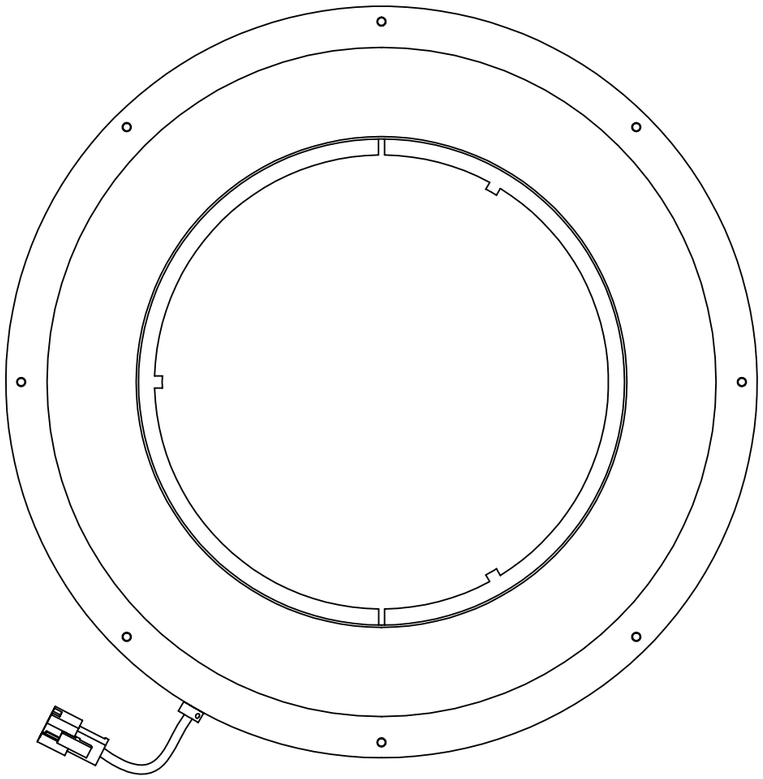

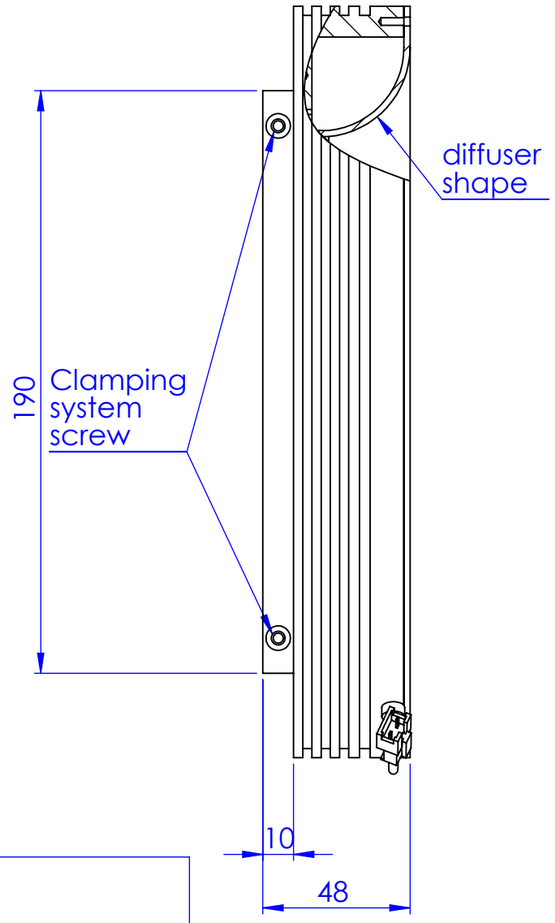

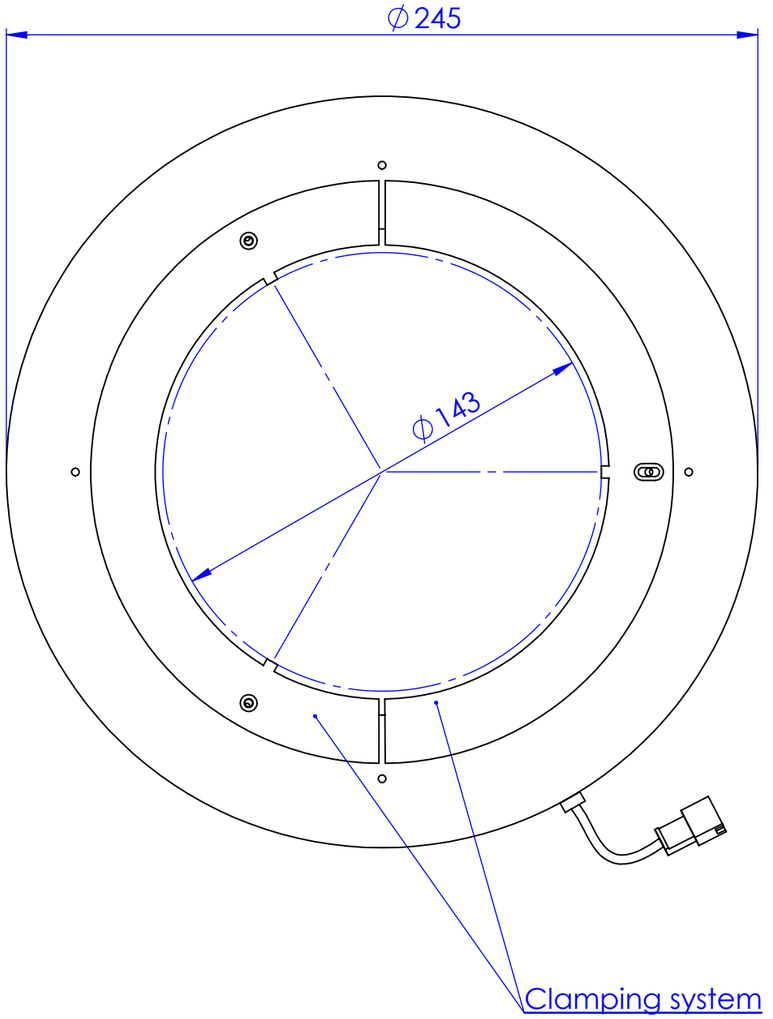

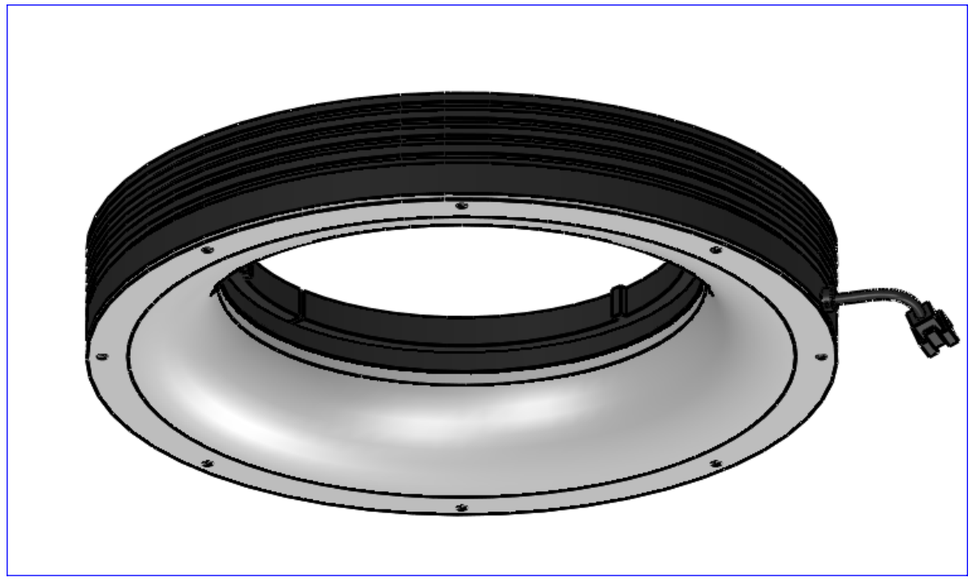

Material	N.A.									Mass	1.2kg
Surface treatment	N.A.									Scale	1:2
										Project-Prod.item/Instrument	LTRN245X35
Geometrical tolerance (ISO 2768-2)							Class	K	Undimensioned bevels	0.5x45°	Description
Linear tolerance (ISO 2768-2)							Class	m			Layout LTRN245X35
0.5 ÷3	>3÷ 6	>6÷ 30	>30÷ 120	>120 ÷400	>400÷ 1000	>1000 ÷2000	>2000 ÷4000	Undimensioned radii	R 0.5		
±0.1	±0.1	±0.2	±0.3	±0.5	±0.8	±1.2	±2				

	Date	Name		
Designed	27/03/12		Drawing No. 16435-0-A	Sheet 1/1
Draw	27/03/12			
Checked	X	C.Sedazzari	*Reproduction forbidden without specific authorization*	

OPTO ENGINEERING
THE TELECENTRIC COMPANY

OPTO ENGINEERING S.r.l. - 46100 Mantova Italy - Via Cremona, 29/2 - Tel. +39 0376 263525 - e-mai: info@opto-engineering.com - http://www.opto-engineering.com